Beach Green North, Rockaways, Queens

101 affordable Passive House rental units scheduled for completion winter 2016/2017

Developer - The Bluestone Organization
Architect - Curtis + Ginsberg Architects LLP
Structural Engineer - De Nardis Engineering
Mechanical Engineer - Johnson & Urban
Design Architect – Global Design Strategies NY
Landscape Architect - Local Office Landscape Architecture
Civil Engineer – Dominick R. Pilla Associates
Civil Engineer – Sullivan Group Design LLC
Geotechnical Engineer - Tectonic
Passive House Consultant – Passive House Institute US
Passive House Consultant - Steven Winter Associates

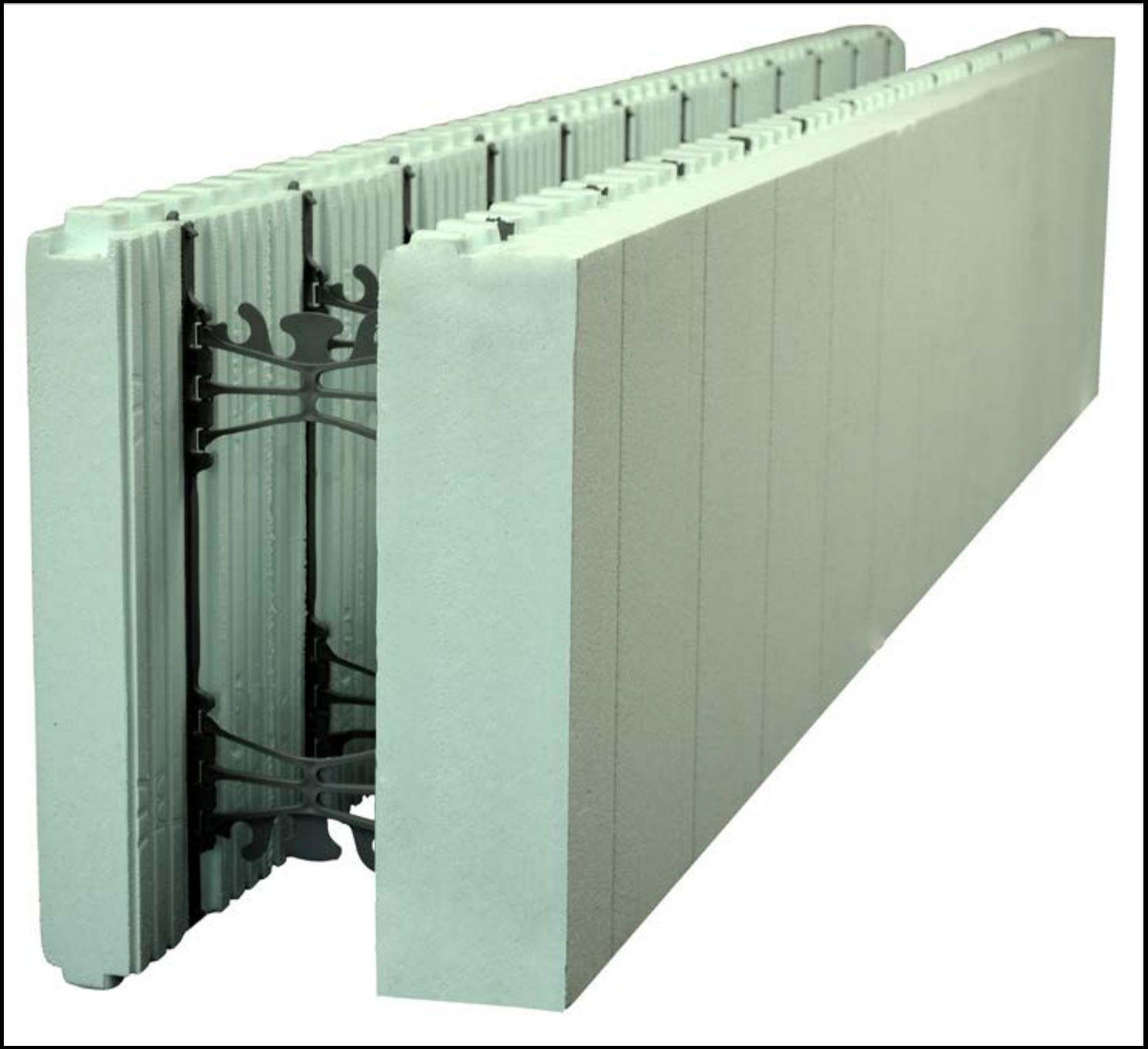

PROSOCO

Distributor Login

We're here to help.
1-800-255-4255

PRODUCTS PROJECTS RESOURCES FIELD SUPPORT WHERE TO BUY

SEARCH

R-Guard®

AIR & WATER BARRIERS

AirDam

Air and weather barrier sealant for windows and doors

AirDam is part of the family of PROSOCO R-GUARD® products developed to prevent the unwanted movement of water and air through building envelopes. R-GUARD AirDam completes the air barrier system by stopping the movement of moist air through cracks surrounding windows and doors. Utilize AirDam in all rough openings prepared with R-GUARD FastFlash.

This single component, 98% solids Silyl-Terminated-Poly-Ether (STPE) is easy to gun and tool in all weather conditions. AirDAm cures quickly to produce a durable, high-performance, high movement elastomeric sealant.

Installed as the interior air sealant, R-GUARD AirDam creates a long lasting, weather-tight seal that prevents moist outside air from entering, and conditioned indoor air from escaping around window and door assemblies. This ensures that wind driven rain and condensed water are diverted to the flashing membrane and the water resistive barrier before it can enter the living

NEW LOOK
SAME FORMULA

CONTEGA FC

pro clima®

Vapor retarding airtight sealing tape to connect corners, window openings/joist penetrations to solid and plastered construction.

Technical properties

- Adhesion by solvent-and plasticizer-free, age-resistant, water-resistant solid adhesive acrylic - waterproof
- Minimum application temp: 15 F°
- Bonding withstands temperatures between -40 F° and 194 F°
- Shelf live: 24 months (dry and cool)
- Very low VOC content
- Permeability 1.4 perm - Sd value: 2.3m
- Color: light blue
- High initial adhesion strength

Roll length:	49'-2.5" (30m)
Roll width:	3-3/8" (85mm)
One adhesive strip with release paper, width	7/8" (20mm)

Technical Specs

Layer	Material
Carrier	Non-woven Polypropylene
Membrane	Special membrane from Polypropylene copolymer
Adhesive	Solid Acrylic
Release paper	Three strips of siliconized PE-Foil

Four Seven Five
High Performance Building Supply
131 Union St. Brooklyn, NY 11231
info@fourseventive.com
718-622-1600

UltimateAir®

Fresh Air, Filtration + Energy Recovery

UltimateAir® ER80M
20-80 CFM

UltimateAire RecoupAerators ER80M

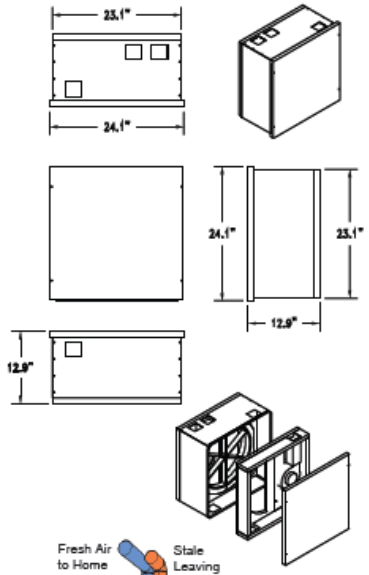

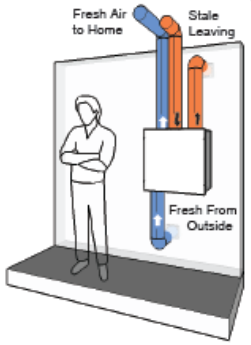

UltimateAir has created the Ideal solution to limited space ventilation. Engineered to be versatile, the duct port layouts allow this ERV to fit into any home, multi-unit, condo, hotel or space limited project in any orientation.

Controls and EC motors allow complete variable fresh air flow 20 - 80 CFM.
Independent Blowers
96% Energy Recovery ASE
Engineered and Made In the United States
Tested CAN/CSA-C439-09 - HVI Listing Equivilent
Less than 0.8 Watt/CFM
MERV 12 Filtration
UL Pending

Energy Recovery PERFORMANCE					Tested CAN/CSA-C439-09		
	Supply Temperature		Net Airflow		Sensible Recovery Efficiency	Apparent Sensible Effectiveness	Net Moisture Transfer
	°C	°F	L/s	cfm			
HEATING	0	32	30	64	83	96	0.69
COOLING	35	95	30	64	53 TRE	85	0.43

PASSIVE HOUSE ALLIANCE SPONSOR

UltimateAir.com : 800.535.3448 : 178 Mill Street Athens, Ohio

always around you zehnder®

Ventilation Unit — **Zehnder ComfoAir 160**

Use
The ComfoAir 160 ventilation unit was developed for residential and small commercial buildings. It combines maximum comfort, simple operation and very high efficiency. The CA160 moves up to 92 cfm of air at 0.80" wc

Efficiency
The integrated cross-counterflow heat exchanger achieves efficiencies of up to 88% (according to testing by the Passive House Institute). For user comfort this means no unpleasant cold drafts, because the supply air is heated nearly to room temperature, even when external temperatures are very low.

Fans
The supply fan and extract fan are driven by efficient DC motors. Differential pressures in the supply and extract air distribution systems can be adjusted thanks to individual control. The especially quiet fans can be adjusted to the required volumetric flow in 1% increments. The air volumes of the selectable stages can be set to between 19 cfm and 92 cfm.

Filters
The CA160 is equipped with two class G4 filters (MERV 7/8). An optional class F7 pollen filter (MERV 13) is available for fresh air intake.

Filter G4

Filter F7

Installation
The CA160 can be wall-mounted (vertically) or ceiling-mounted (horizontally). Connections for air and wiring are on the top of the unit. The insulated, sound-absorbing pipe connections can be rotated to optimize the location of the ventilation tubes while acoustically decoupling the CA160 from the air distribution system. The condensate drain is located on the bottom of the unit.

Operation
The CA160 is controlled by the ComfoSense controller, typically installed in the living area. Optional, wireless remote control units are installed in bathrooms for timed boost mode.

ComfoSense controller

Maintenance
Maintenance of the CA160 is limited to periodic cleaning or replacement of the filters accessible from the front of the unit. The exchanger core should be inspected and cleaned annually (depending on outside air quality). Please see the unit manual for additional servicing tasks.

Frost protection
If the ventilation unit is operated without an optional geothermal heat exchanger, condensate in the extract air may freeze. The frost protection setting prevents this by variably reducing the supply air volume. An optional, integrated electric preheater warms incoming fresh air to prevent the heat exchanger from freezing even at very low temperatures.

Remote Control Timer

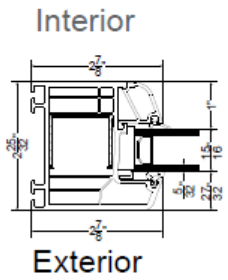

1	JAMB / HEAD TO FIXED WINDOW SCALE 1' - 0" = 1' - 0"

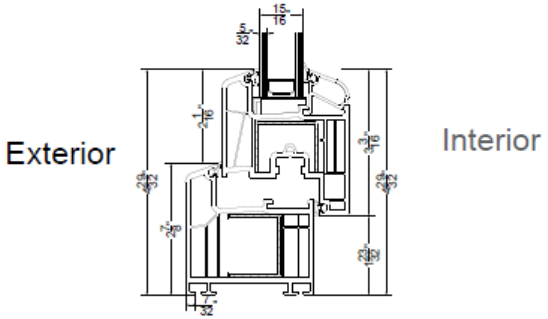

2	JAMB / HEAD TO OPERABLE WINDOW SCALE 1' - 0" = 1' - 0"

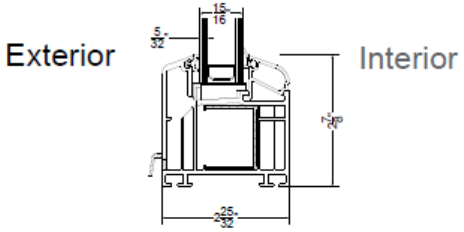

3	SILL TO FIXED WINDOW SCALE 1' - 0" = 1' - 0"

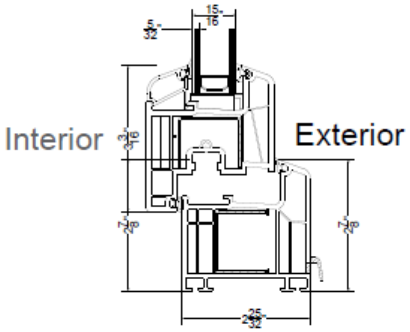

4	SILL TO OPERABLE WINDOW SCALE 1' - 0" = 1' - 0"


Certified
Passive House
Passive House Institute


PH
PHIUS + CERTIFIED 2012

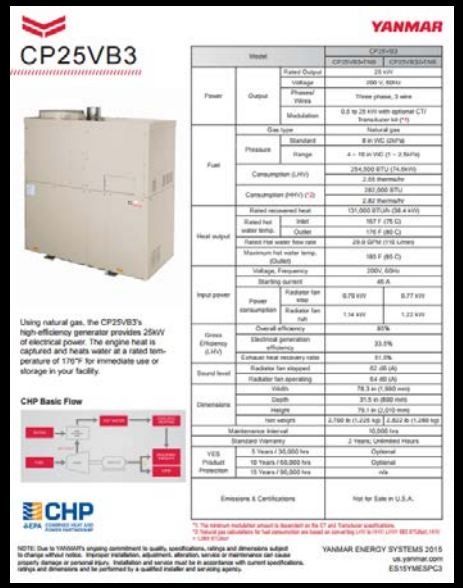

YANMAR

CP25VB3

Using natural gas, the CP25VB3's high-efficiency generator provides 25kW of electrical power. The engine heat is captured and heats water at a rated temperature of 176°F for immediate use or storage in your facility.

CHP Basic Flow

Model			CP25VB3	
			CP25VB3-TNB	CP25VB3DTNB
Power	Output	Rated Output	25 kW	
		Voltage	208 V, 60Hz	
		Phases/ Wires	Three phase, 3 wire	
		Modulation	0.5 to 25 kW with optional CT/ Transducer kit (*1)	
Fuel	Gas type		Natural gas	
	Pressure	Standard	8 in WC (2kPa)	
		Range	4 – 16 in WC (1 – 3.9kPa)	
	Consumption (LHV)		254,500 BTU (74.6kW)	
			2.55 therms/hr	
	Consumption (HHV) (*2)		282,000 BTU	
			2.82 therms/hr	
Heat output	Rated recovered heat		131,000 BTU/h (38.4 kW)	
	Rated hot water temp.	Inlet	167 F (75 C)	
		Outlet	176 F (80 C)	
	Rated Hot water flow rate		29.0 GPM (110 Liters)	
	Maximum hot water temp. (Outlet)		185 F (85 C)	
Input power	Voltage, Frequency		208V, 60Hz	
	Starting current		46 A	
	Power consumption	Radiator fan stop	0.70 kW	0.77 kW
		Radiator fan run	1.14 kW	1.22 kW
Gross Efficiency (LHV)	Overall efficiency		80%	
	Electrical generation efficiency		33.0%	
	Exhaust heat recovery rate		51.3%	
Sound level	Radiator fan stopped		62 dB (A)	
	Radiator fan operating		64 dB (A)	
Dimensions	Width		78.3 in (1,990 mm)	
	Depth		31.5 in (800 mm)	
	Height		79.1 in (2,010 mm)	
	Net weight		2,700 lb (1,225 kg)	2,822 lb (1,280 kg)
Maintenance Interval			10,000 hrs	
Standard Warranty			2 Years, Unlimited Hours	
YES Product Protection	5 Years / 30,000 hrs		Optional	
	10 Years / 60,000 hrs		Optional	
	15 Years / 90,000 hrs		n/a	
Emissions & Certifications			Not for Sale in U.S.A.	

*1 The minimum modulation amount is dependent on the CT and Transducer specifications.
*2 Natural gas calculations for fuel consumption are based on converting LHV to HHV: 1000 BTU/ft3, HHV = 1.1069 BTU/ft3

CHP

NOTE: Due to YANMAR's ongoing commitment to quality, specifications, ratings and dimensions subject to change without notice. Improper installation, adjustment, alteration, service or maintenance can cause property damage or personal injury. Installation and service must be in accordance with current specifications, ratings and dimensions and be performed by a qualified installer and servicing agency.

YANMAR ENERGY SYSTEMS 2015
us.yanmar.com
ES15YMESPC3

Minimum R30 at walls, R40 at roofs,
& R30 over unheated garage/crawl spaces

Proper air sealing

Individual Energy Recovery Ventilators in each apartment

Double glazed UPVC windows (triple not needed!)

Windows set deep into thick walls for extra shading

Photovoltaics

CHP (cogeneration)

Wind turbines

Battery storage/peak load reduction

Sub-metered electricity and water

Steve Bluestone

sb@bluestoneorg.com