High Rise Buildings & Passive House

By: Lois B. Arena, PE, CPHD

Steven Winter Associates, Inc.
Improving the Built Environment Since 1972

Overview

- High Rise vs. Low Rise
- Thermal Envelope
- Heating & Cooling
- Ventilation
- Auxiliary Spaces

PH DIFFERENCES: HIGH RISE VS. LOW RISE

High Rise Buildings

Today's Focus: Multi-Family, High Rise

2012 IBC, Chapter 2 Definitions

HIGH-RISE BUILDING. Buildings having floors used for human occupancy located more than 75 feet (22 860 mm) above the lowest level of fire department vehicle access.

Multi-Family, High-Rise-Specific Issues

- Wall assembly – typical curtain wall requires tweaks
- Windows – comfort criteria, European ratings vs. American
- Ventilation – type, flows, efficiency requirements
- Energy demand in auxiliary spaces
- Size of apartments – refrigerant limits, ventilation options

High Rise vs. Low Rise

- Likely cooling dominated in a heating dominated climate
- Common area lighting
- Envelope efficiency requirements of less concern than comfort criteria
- Density of apartments & appliance loads
- Less insulation can help cooling loads!

Cooling Dominated

- Shading is difficult & costly to incorporate
- SHGC of windows very important – low on all orientations
- Internal gains dominate solar gains

	kWh/(m²a)
Available solar heat gains Q_S	17.1
Internal heat gains Q_I	29.8

Density

- More internal gains/ft^2 – people, appliances
- ↑ primary energy demand
- ↑cooling energy demand,
- ↓heating energy demand

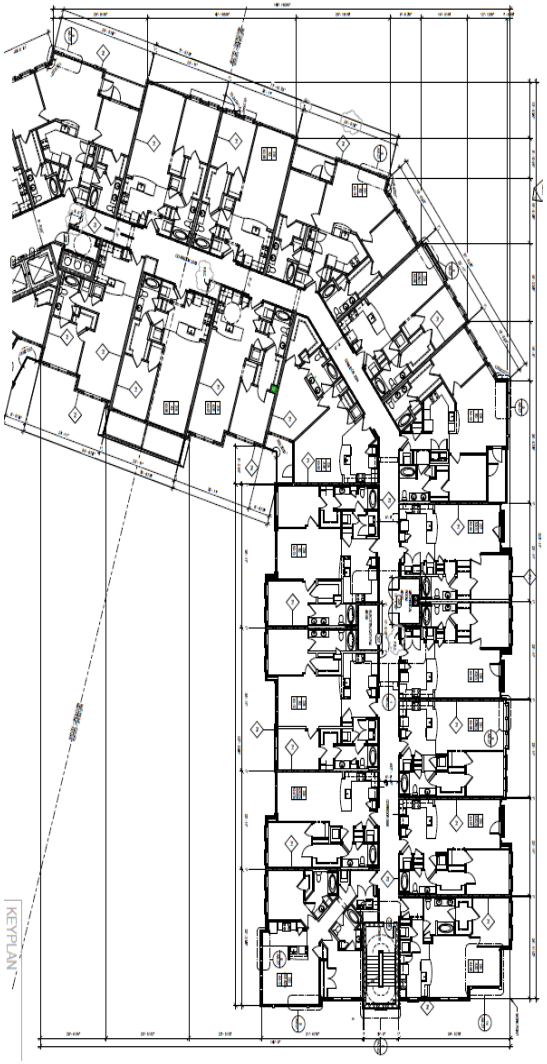

ENVELOPE EFFICIENCIES

Walls

- Curtain Wall Facades Common
  - Steel framing typical
  - Non-structural
  - Designed to span multiple floors

http://www.enclos.com/news-page/modular_prefab_the_installation_of_unitized_curtainwall_systems

Curtain Walls

- Pro's
  - Continuous insulation on the exterior of the building
  - Panels constructed in factory, less variability of install quality
- Con's
  - Attachments to building & other panels – possible thermal bridges & air infiltration
  - Final air sealing done from exterior
  - Alignment of air, water, vapor barrier difficult
  - Fire rated insulation needed

Roofs

- Parapets
- Drain penetrations on flat roofs

Parapet Detail

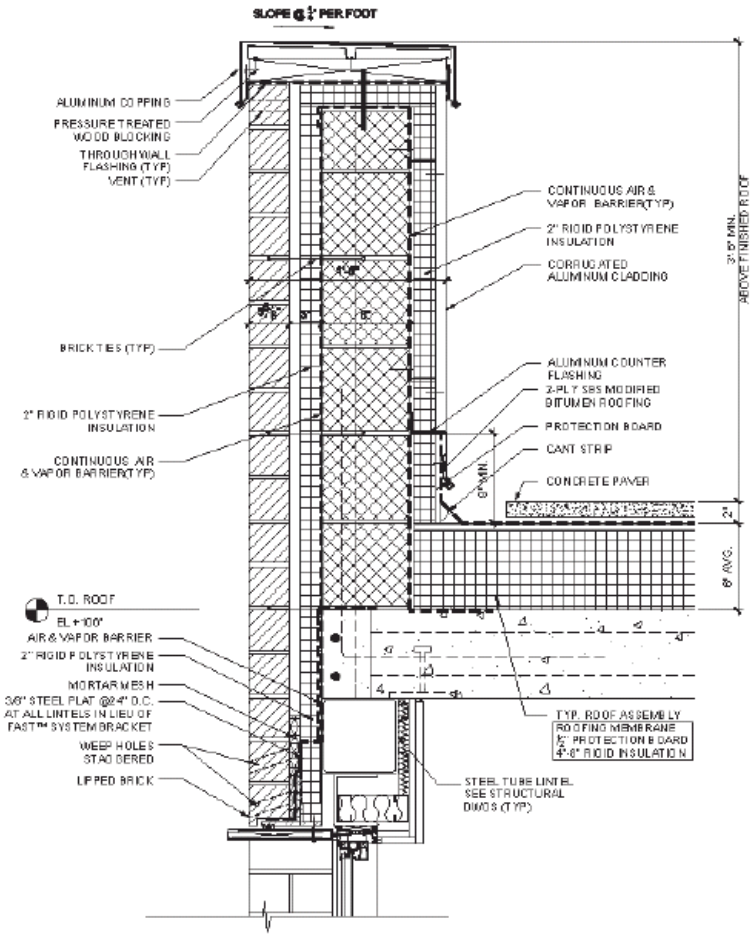

E5 DETAIL : TYP. PARAPET
ROOF

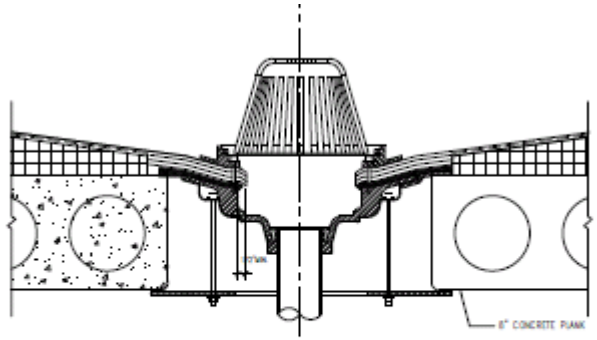

8 ROOF DRAIN - PLANK
SCALE: 3" = 1'-0"

Credit: Dattner Architects

Foundation

- Structural requirements – compressive strength
  - Loads can be 5000 psi
  - 1800 psi best compressive strength found to date

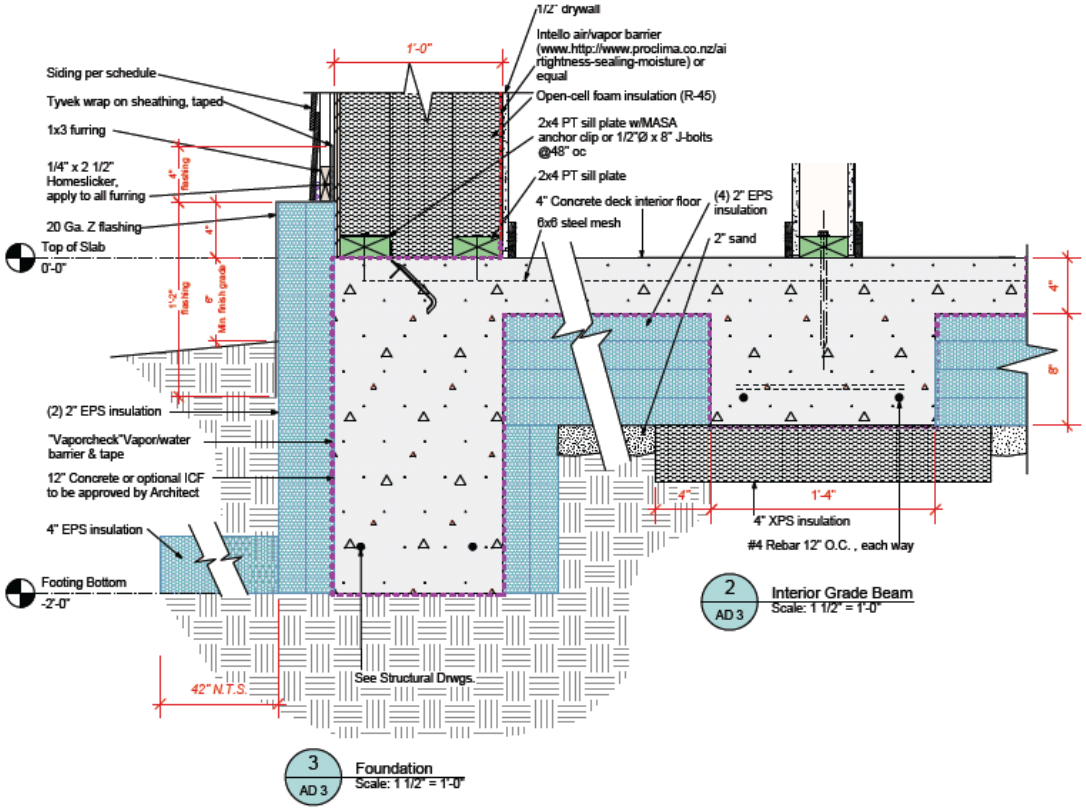

Windows - Efficiency

- ISO vs. NFRC
  - Lots of confusion for US manufacturers
  - No direct conversion
  - ISO values are required

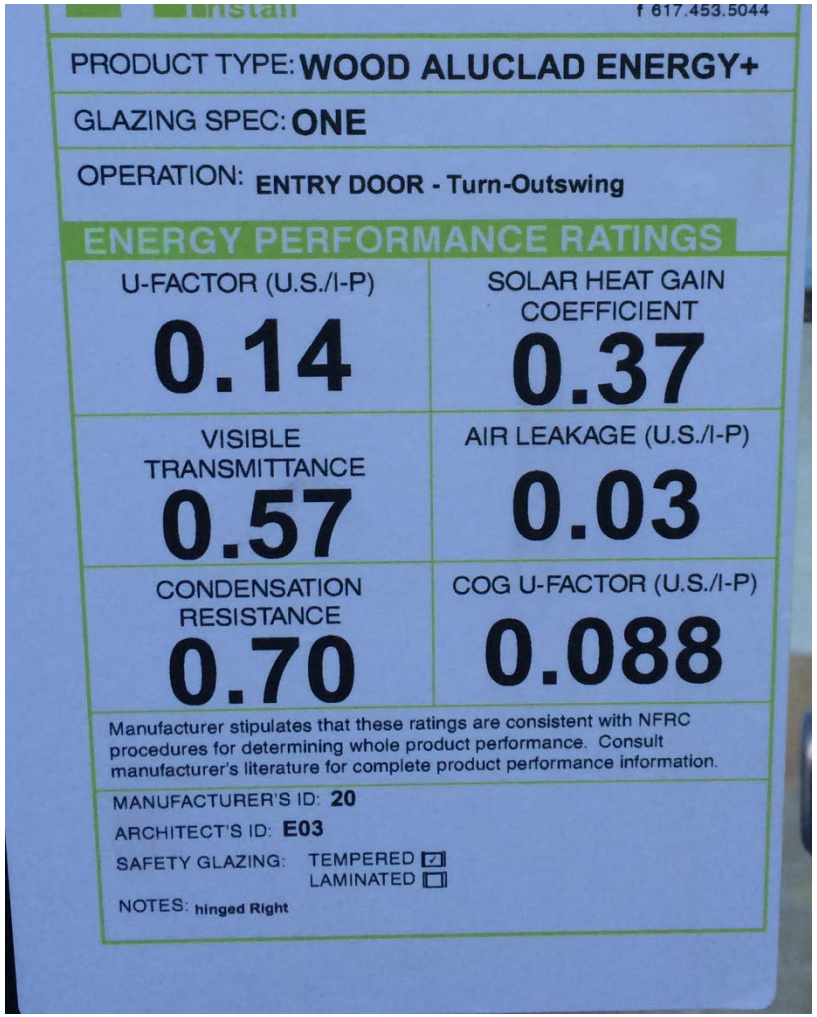

Windows - Shading

- Overhangs – not typical in high rise

Windows - SHGC

- Balance between cooling & heating
- Summer will likely win, lower values than recommended by PH
- Balance point could be as low as 0.3 for all facades
  - Too low, primary energy demand is too high
  - Too high, cooling energy demand is too high

Potential Packages

- R-50 roof
- R-18 wall
- U_w- 0.18 (trp)
- R-10 slab
- 75% ERV
- Mini-splits

Specific building demands with reference to the treated floor area

				Requirements	Fulfilled?*
	Treated floor area	18236.4	m²		
Space heating	Heating demand	**8**	**kWh/(m²a)**	15 kWh/(m²a)	**yes**
	Heating load	**12**	**W/m²**	10 W/m²	**-**
Space cooling	Overall specif. space cooling demand	**15**	**kWh/(m²a)**	17 kWh/(m²a)	**yes**
	Cooling load	**9**	**W/m²**	-	**-**
	Frequency of overheating (> 25 °C)		%	-	**-**
Primary energy	Heating, cooling, dehumidification, DHW, auxiliary electricity, lighting, electrical appliances	**117**	**kWh/(m²a)**	120 kWh/(m²a)	**yes**
	DHW, space heating and auxiliary electricity	52	kWh/(m²a)	-	**-**
	Specific primary energy reduction through solar electricity		kWh/(m²a)	-	**-**
Airtightness	Pressurization test result n_{50}	**0.6**	**1/h**	0.6 1/h	**yes**

* empty field: data missing; '-': no requirement

Potential Packages

- R-50 roof
- R-30/18 wall
- U_w- 0.25 (dbl)
- R-10 slab
- 75% ERV
- Mini-splits

Specific building demands with reference to the treated floor area

				Requirements	Fulfilled?*
	Treated floor area	18236.4	m²		
Space heating	Heating demand	**10**	**kWh/(m²a)**	15 kWh/(m²a)	**yes**
	Heating load	**13**	**W/m²**	10 W/m²	**-**
Space cooling	Overall specif. space cooling demand	**15**	**kWh/(m²a)**	17 kWh/(m²a)	**yes**
	Cooling load	**9**	**W/m²**	-	**-**
	Frequency of overheating (> 25 °C)		%	-	**-**
Primary energy	Heating, cooling, dehumidification, DHW, auxiliary electricity, lighting, electrical appliances	**120**	**kWh/(m²a)**	120 kWh/(m²a)	**yes**
	DHW, space heating and auxiliary electricity	55	kWh/(m²a)	-	**-**
	Specific primary energy reduction through solar electricity		kWh/(m²a)	-	**-**
Airtightness	Pressurization test result n_{50}	**0.6**	**1/h**	0.6 1/h	**yes**

* empty field: data missing; '-': no requirement

High Rise vs. Single Family

	High Rise Project 200,000 ft²	**Single Family Home 1600 ft²**	**PH Threshold**
	kBtu/ft² yr (kWh/m² yr)	kBtu/ft² yr (kWh/m² yr)	kBtu/ft² yr (kWh/m² yr)
Space heating demand	2.5 (8)	**7.73 (24.4)**	4.75 (15)
Space cooling demand	4.75 (15)	3.95 (12.5)	4.75 (17)
Primary energy demand	37 (117)	**58 (183)**	38 (120)
PH	Yes	No	--

Soft Requirements

- "… The following are generally required:
  - openable windows in all living areas,
  - a low overheating frequency (≤ 10 % over 25 °C)
  - user-adjustable ventilation volume flow rates and indoor temperatures."
- In agreement with the PHI, exceptions may be made with reference to these three points if compliance with the requirement for thermal comfort, user satisfaction and structural integrity can be guaranteed.

Comfort Criteria

- Interior surface temperatures should not deviate by more than 7.6°F from the average operative temperature on the inside;
- the surface temperature must not be lower than 55.4°F or greater than 132°F at any point;
- the surface temperature of the floor must be between 66°F and 81°F.

HEATING & COOLING OPTIONS

HVAC: High Rise Requirements

- Heating and cooling needed
- Individual control to accommodate different comfort levels
- Very energy efficient
- Limited ceiling heights and floor plans

HVAC: High Rise Options

- Options
  - central boiler + window A/C
  - Individual apartment air handlers
  - Mini-splits

HVAC: Potential Issues

- Central boiler + window A/C
  - Pro's
    - Lower first cost
    - Can properly size heating system
  - Con's
    - Through wall AC typically inefficient
    - Leakage hard to control
    - Thermal bridge through envelope

HVAC: Potential Issues

- Individual air handlers
  - Pro's
    - Easy to meter occupants
  - Con's
    - Small enough systems not readily available
    - Floor plan alterations to accommodate ductwork
    - Electric is typical to eliminate venting

HVAC: Potential Issues

- Mini-splits
  - Pro's
    - Easy to meter occupants
    - Most efficient option for combined system
    - Part load operation easily achieved w/ VRF
  - Con's
    - First cost
    - Refrigerant charge limitations

Potential Issue

Refrigerant Charge

Code Constraint:

- NYC Mechanical Code 2008, Table 1103.1
  - 10 lbs of 410-A refrigerant per 1000ft^3 of space

CODE [1104.4.1]

"Non-communicating spaces. Where the refrigerant-containing parts of a system are located in one or more spaces that do not communicate through permanent openings or HVAC ducts, the volume of the smallest, enclosed occupied space shall be used to determine the permissible quantity of refrigerant in the system."

BALANCED VENTILATION W/ HEAT RECOVERY

Central vs. Local ERV's

	1	2
	Individual ERV	**Central ERV**
Penetrations	**Façade** - 2 penetrations/apartment - separation exhaust/supply 10' NYC Mech Code - exhaust 2' from apt window, 4' neighbor	**Rooftop only**
Metering	Resident Meter (ERV)	Owner Meter (ERV)
Pros - Arch	- No slab penetrations	- No horizontal ducts
Cons- Arch	- 10' façade separation - Ceiling height issues - Ductwork, Aesthetics	- Floor space reduction - Large slab penetrations - Rated shafts
Pros- MEP	- Continuous, boost flow achievable - PH certified units available	- Continuous, boost flow achievable
Cons - MEP		- Variable flow rates achievable, complexity of controls - Rooftop ERV compliance with PH testing would be beneficial, currently unknown
PH Compliance/Testing	Precedent for unitized ERV to provide flow rates	No precedent for central balanced system w/ HR in US
Operations	- In-unit maintenance, - Filter change 3x/yr	- Rooftop maintenance
First Cost	similar	

Ventilation: Project Requirements

- PH Requirements
  - Balanced continuous mechanical ventilation
  - Heat recovery for cold climates
  - 75% or better recovery efficiency
  - Minimum ventilation of 0.30 ACH continuous
  - Occupant ability to boost to higher levels when desired
  - Minimum boost in kitchen – 35 cfm
  - Minimum boost in bathrooms – 24 cfm

Ventilation NYC Code

- NYC Vent Rates
  - Intermittent or continuous levels allowed
  - Minimum of 0.35 ACH or 15 cfm/person
  - Kitchen – 100 cfm intermittent or 25 continuous
  - Baths – 50 intermittent or 20 continuous
  - If using a continuous system, exhaust ventilation can dictates rates

TABLE 403.3
REQUIRED OUTDOOR VENTILATION AIR

Kitchens [g]	—	100 cfm intermittent or 25 cfm continuous
Living areas [c]	Based upon number of bedrooms. First bedroom: 2; each additional bedroom: 1	0.35 air changes per hour[a] or 15 cfm per person, whichever is greater
Toilet rooms and bathrooms [g]	—	Mechanical exhaust capacity of 50 cfm intermittent or 20 cfm continuous

Ventilation Conflicts

- Rates
  - NYC code continuous rates higher than PH
  - would result in ≈ 2.5 times the PH ventilation

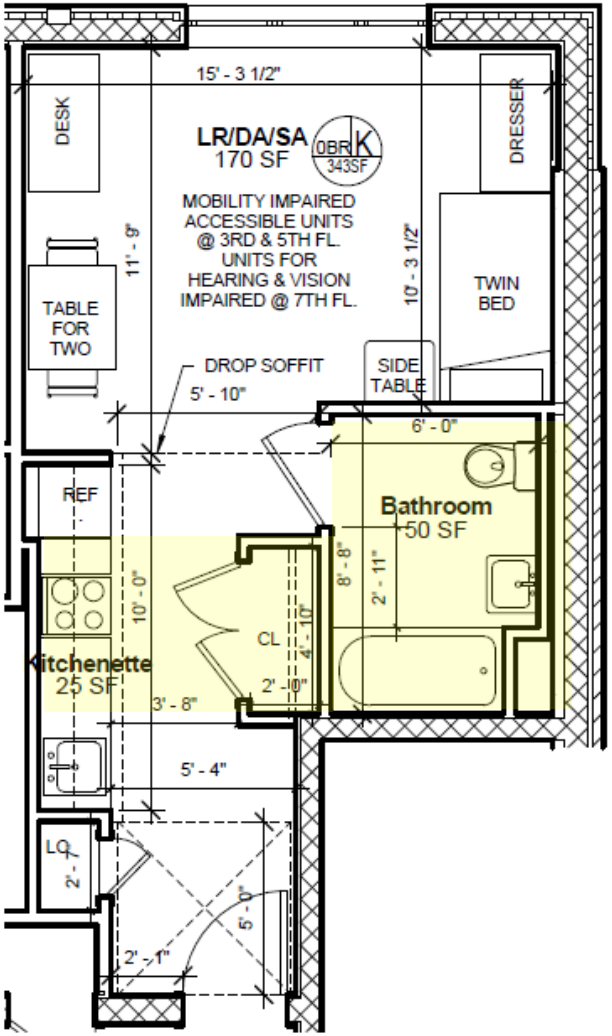

NYC_c: 45 cfm exhaust only
PH_c: 15 cfm balanced
PH_b: 59 cfm balanced

Ventilation NYC Code

- NYC Vent Rates
  - Combining kitchen & bath exhaust ducts not allowed

Code Constraint:

- NYC Mechanical Code 2008, Section 501.5.1

"Single or combined mechanical exhaust systems from bath, toilet, urinal, locker, service sink closets and similar rooms shall be independent of all other exhaust systems…."

Ventilation Conflicts

- Balanced Delivery
  - Inability to combine bath & kitchen ducts results in imbalance at the ERV
    - Incomplete energy recovery
    - Less than required make up air may be delivered

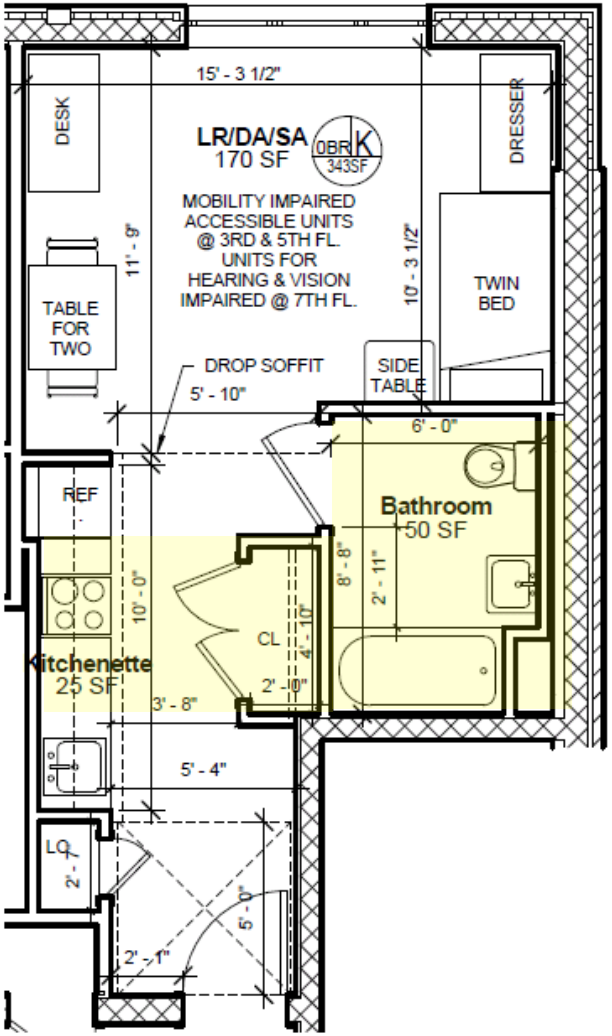

KEY COMPONENTS FOR CENTRAL SYSTEMS

Central Exhaust Systems

Roof Fans

- Vertical shaft
- Horizontal take-offs
- Sidewall or ceiling grilles at each floor

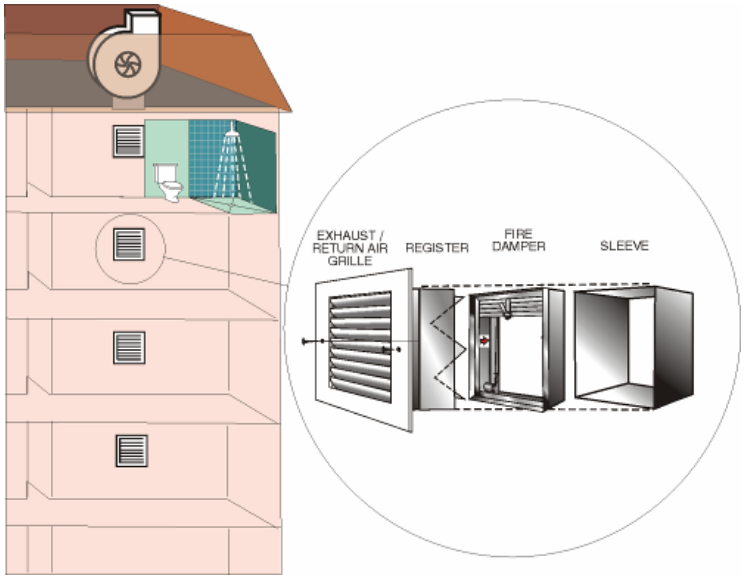

All or Nothing

- Continuous Venting
- Intermittent

What actually happens...

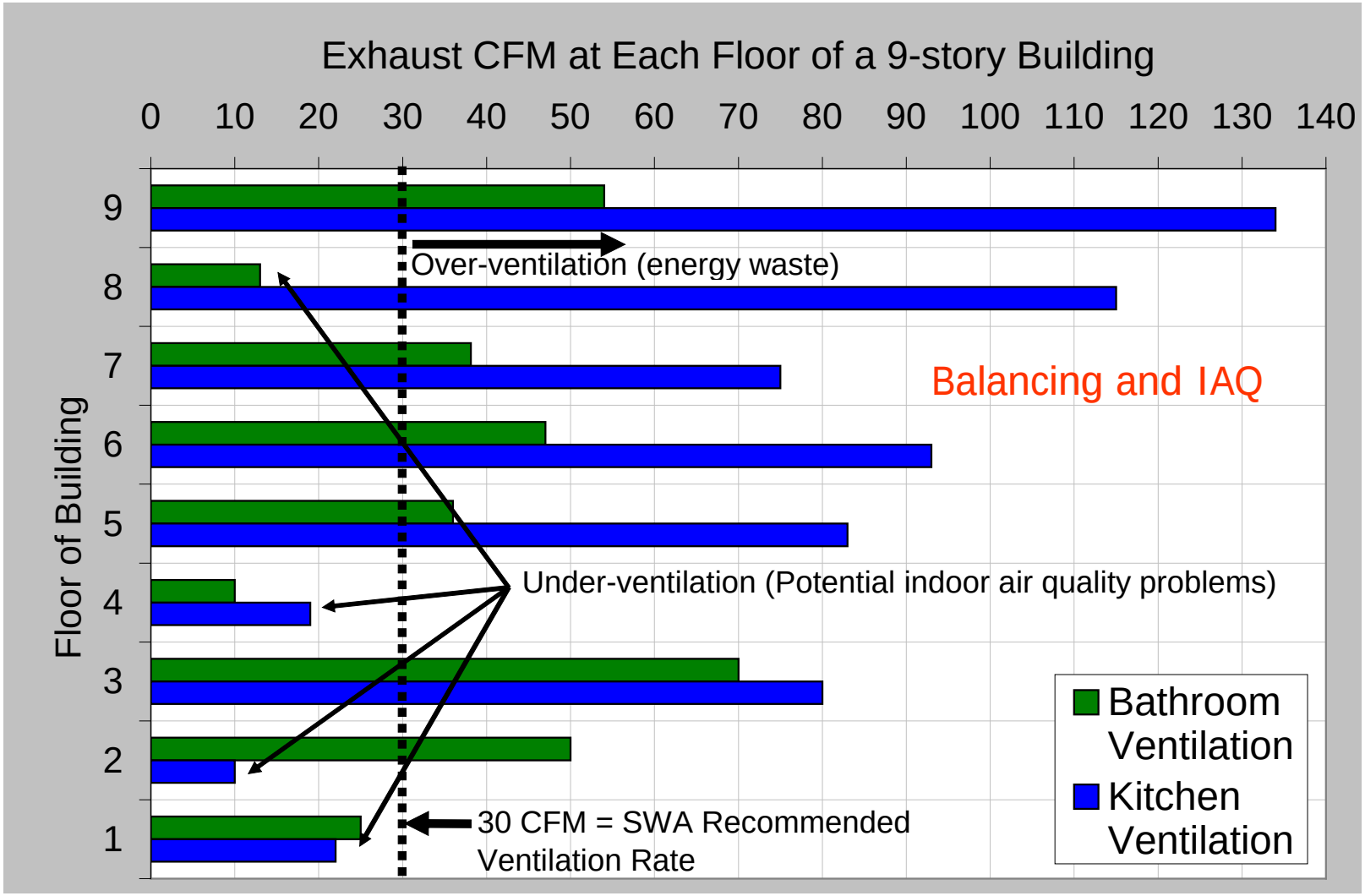

Delivery System Leakage

Implications of exhaust system leakage not as well understood by contractors

Leakage at sheetrock connections

Leakage at shaft/sheet metal connections

Reduce System Leakage

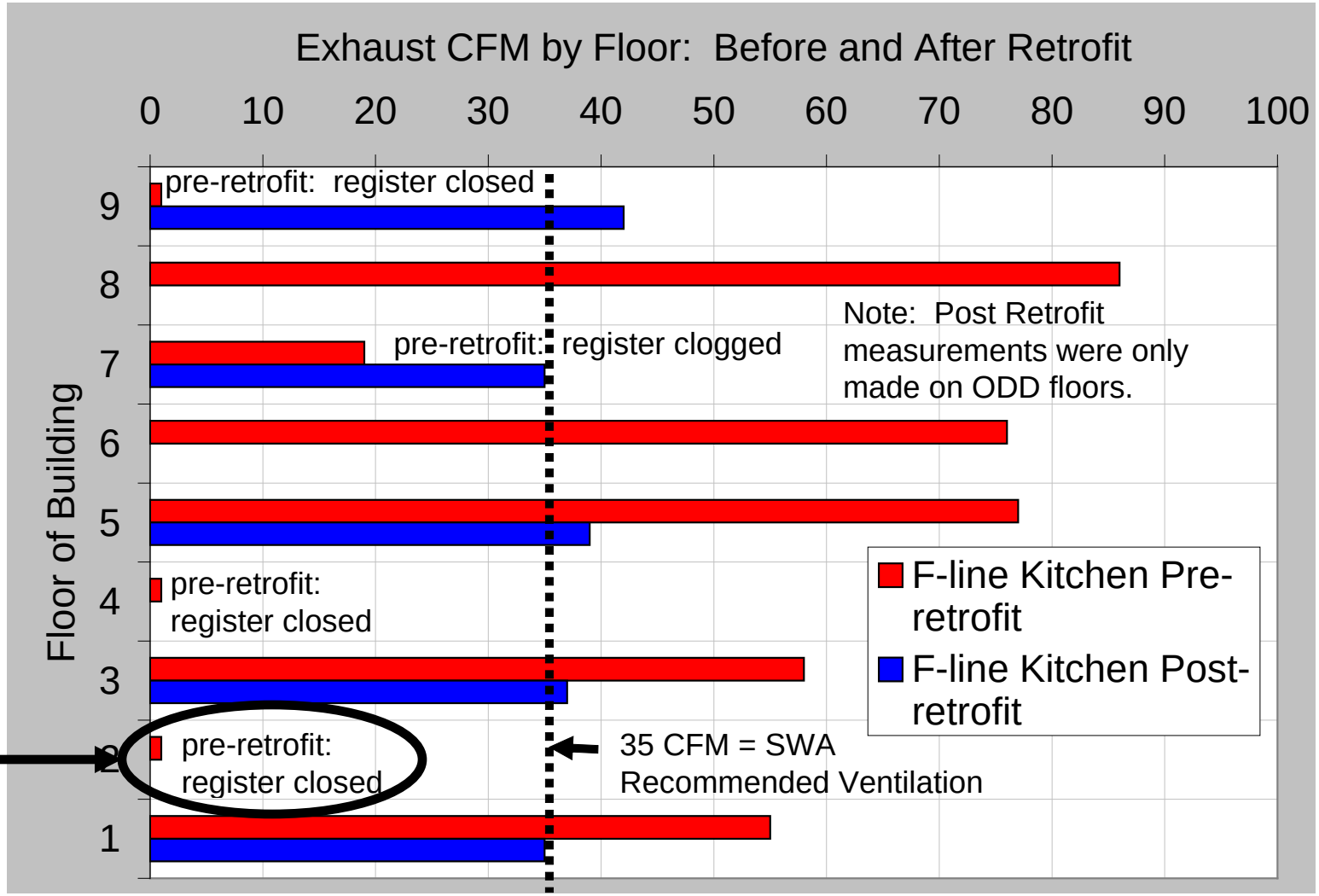

Ducts Engineered/Installed for Precise Flow

ZRT Models

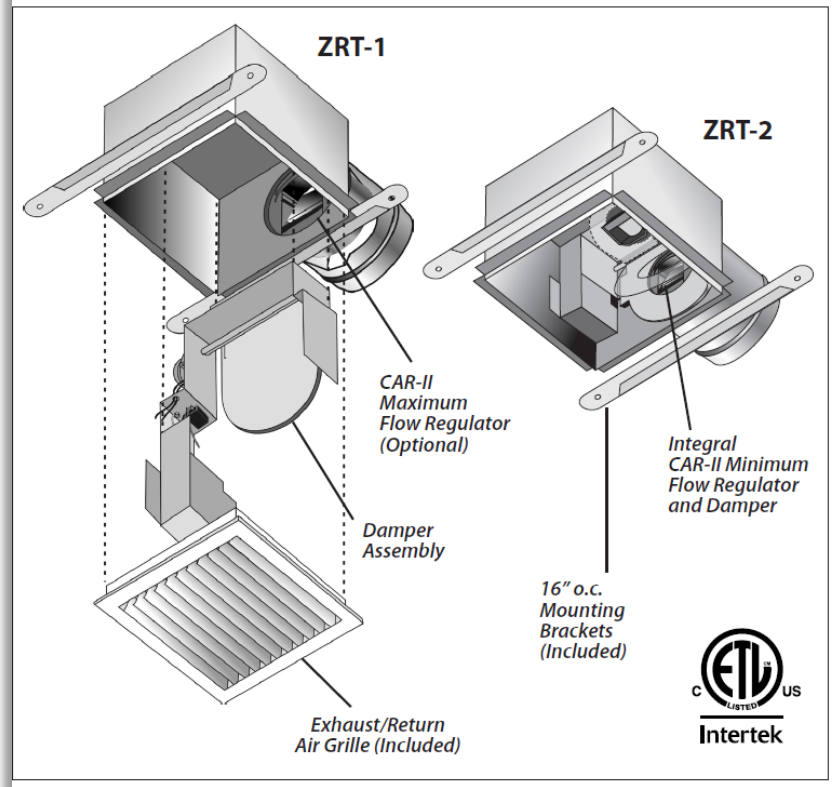

Certificate of Completion

Duct Sealing Performed for:
Riser TXF-4
529 W 29th St.
New York,NY 00000
(999)999-9999

Overall Sealing Results

When we arrived,
YOUR DUCTS HAD:

602 CFM of Leakage, equivalent to a
75 Square Inch Hole

After we finished,
YOUR DUCTS HAVE:

7 CFM of Leakage, equivalent to a
1 Square Inch Hole

This corresponds to a **99%**
Reduction in Duct Leakage

Note: Duct leakage results are calculated in cubic feet per minute (CFM) measured at your reported duct OPERATING PRESSURE of 50 Pa.

Aerosol Sealing Profile

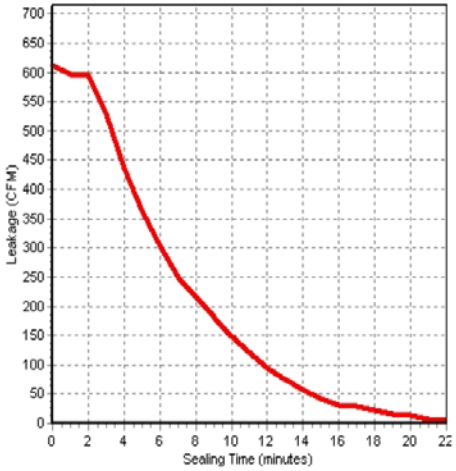

The flow capacity improvement for this duct system was
149%
of fan flow based upon measured leakage and operating pressure.

Post-Retrofit Results

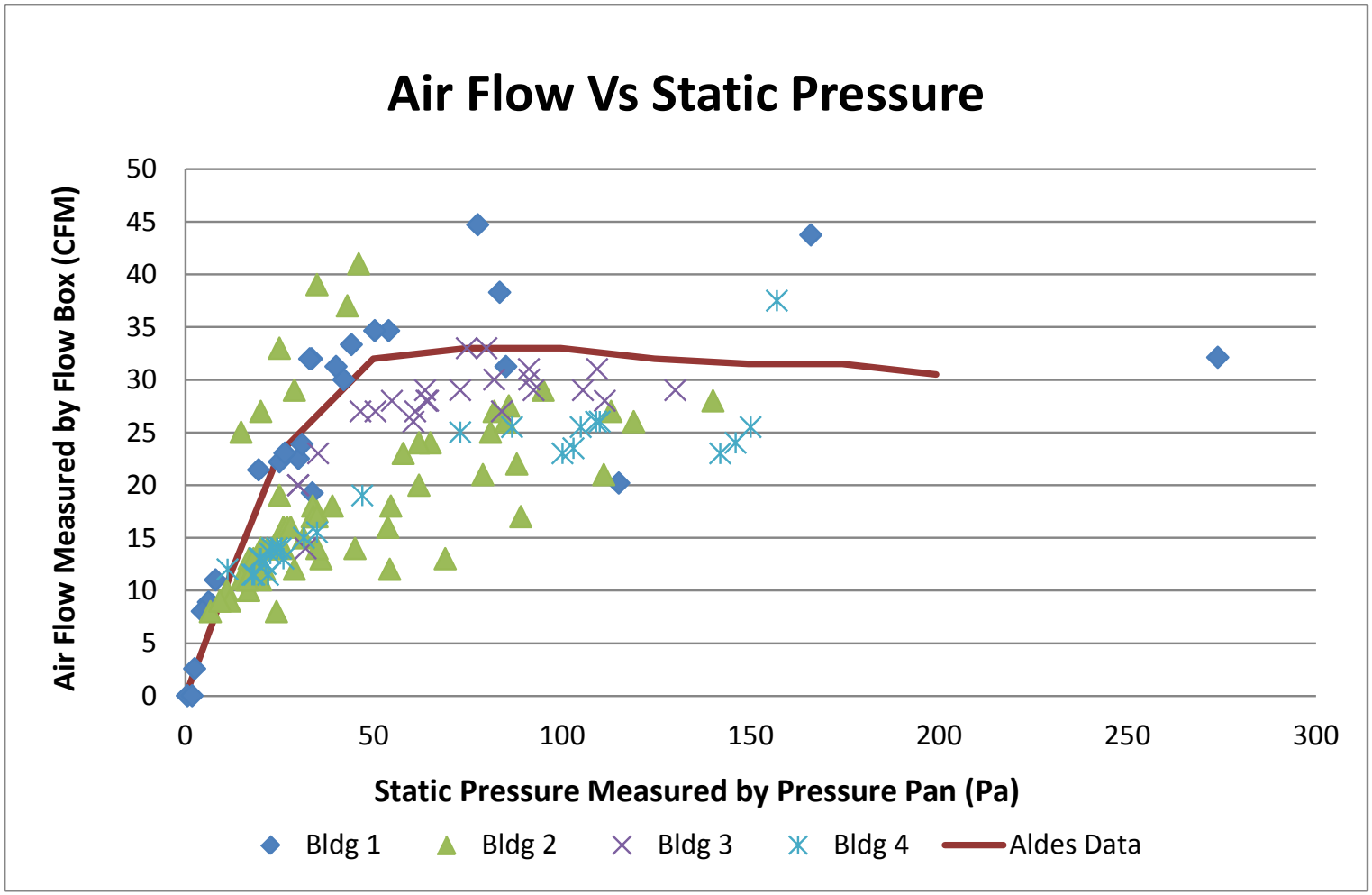

Auxiliary Spaces

- Common Area Lighting – pay attention to control strategies
- Fitness rooms – some equipment is very energy intensive
- Common Laundries – make up air for vented dryers
- Elevators – very little actual data, defaults
- Non-residential space ventilation – assume turn down when possible

Recommendations

- Passive House
  - Review of cooling dominated buildings in heating climates
  - Clean up/clarify online content
- Practitioners/Consultants
  - Assume comfort and durability “soft” criteria are “hard” requirements
- Industry
  - Better ventilation equipment and delivery systems are needed

Questions?

Thank You.

Lois B. Arena, PE, CPHD